Natural Language Processing

Autumn 2026

Week 6: RNN and LSTM

Form Your Assignment 3 Group Now

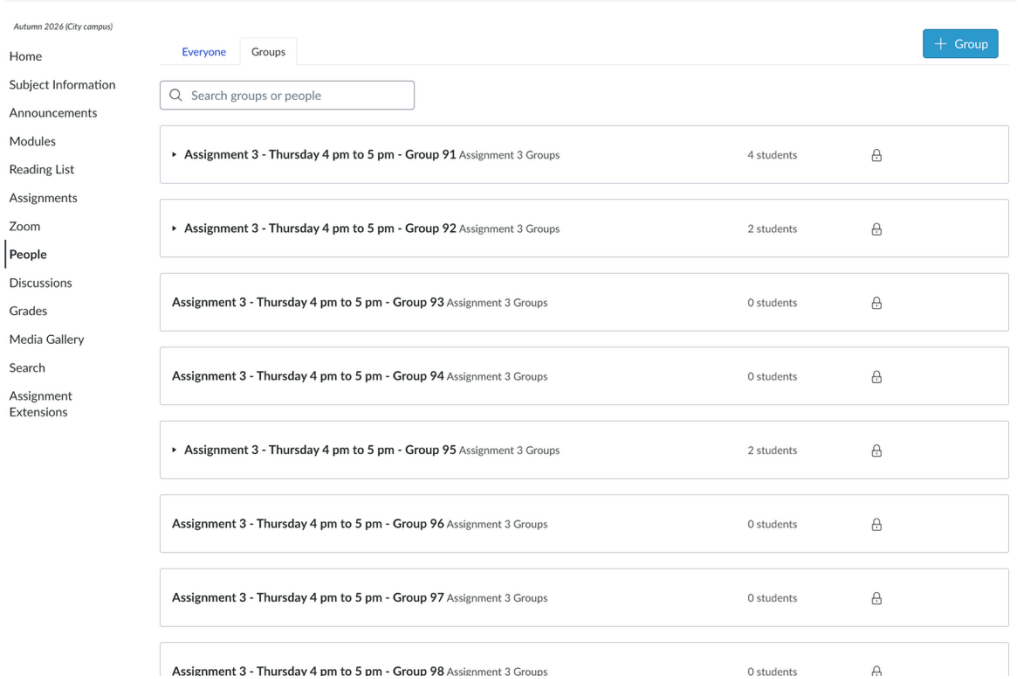

- Talk to your tutor for help **in this week's workshop** if you haven't formed your group for your assignment 3.

Enter your member information here on Canvas if you have formed a team.

Recall Text CNN

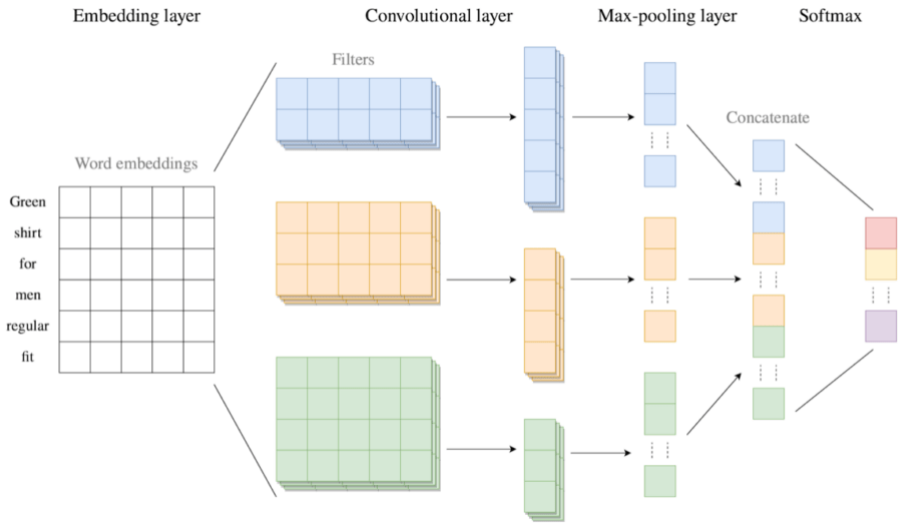

Text CNN is a Neural Network in which the input is a sequence (texts), and the output is labels.

What if we need the outputs to be a sequence too?

Images: https://shorturl.at/cYnbE

Recurrent Neural Network

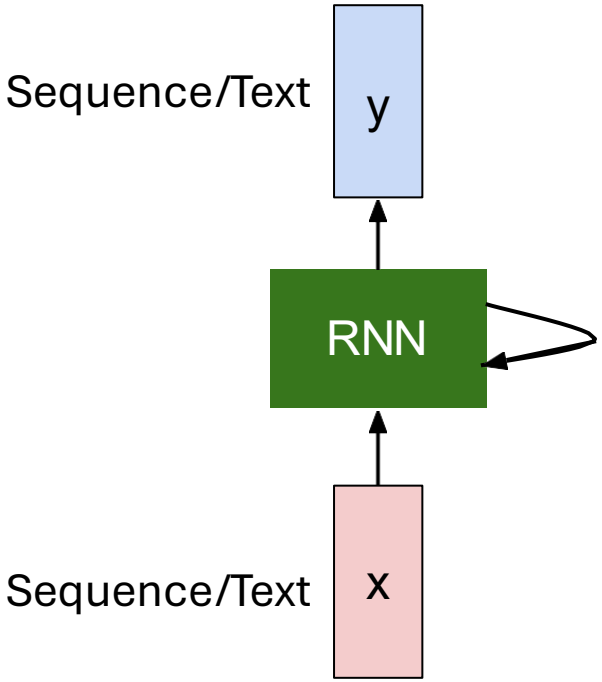

RNN is a Neural Network in which both input and output are sequences (i.e., texts or feature sequences).

Recurrent Neural Network

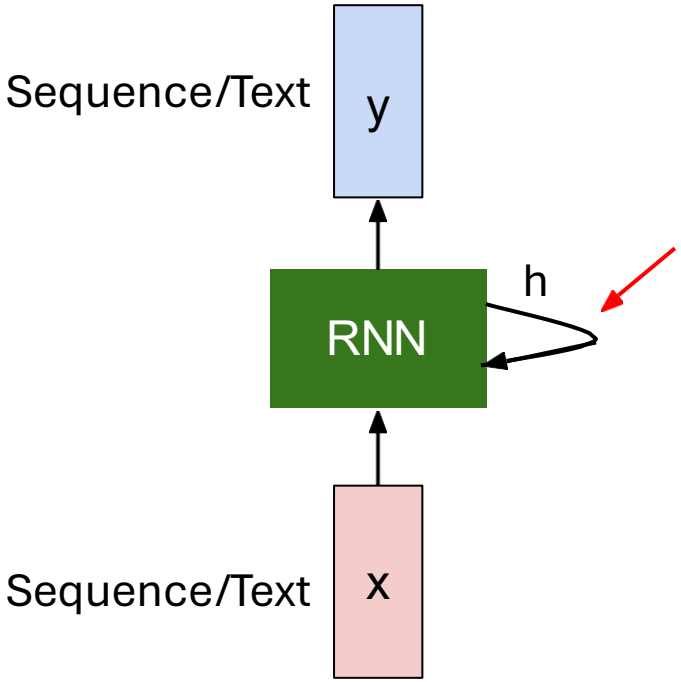

Key idea: RNNs have an "internal state *h*" that is updated as a sequence is processed

RNN hidden state update

We can process a sequence of vectors **x** by applying a **recurrence formula** at every time step:

$$\boxed{h_t} = \boxed{f_W}(\boxed{h_{t-1}}, \boxed{x_t})$$

new state

old state

input vector at some time step

some function with parameters W

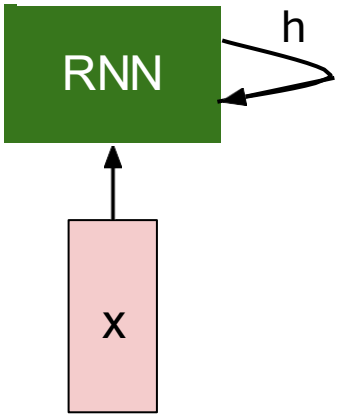

RNN output generation

We can process a sequence of vectors **x** by applying a **recurrence formula** at every time step:

$$y_t = f_{W_{hy}}(h_t)$$

output

new state

another function with parameters W_o

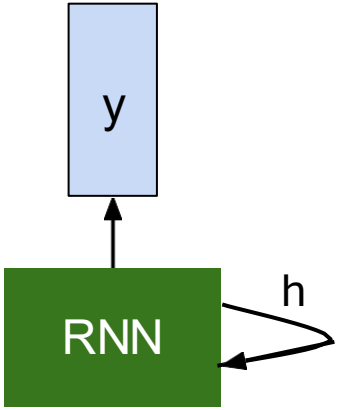

Recurrent Neural Network

We can process a sequence of vectors **x** by applying a **recurrence formula** at every time step:

$$h_t = f_W(h_{t-1}, x_t)$$

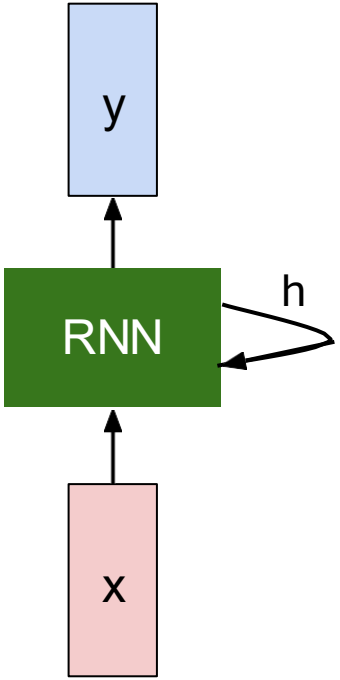

Notice: the same function and the same set of parameters are used at every time step.

Recurrent Neural Network

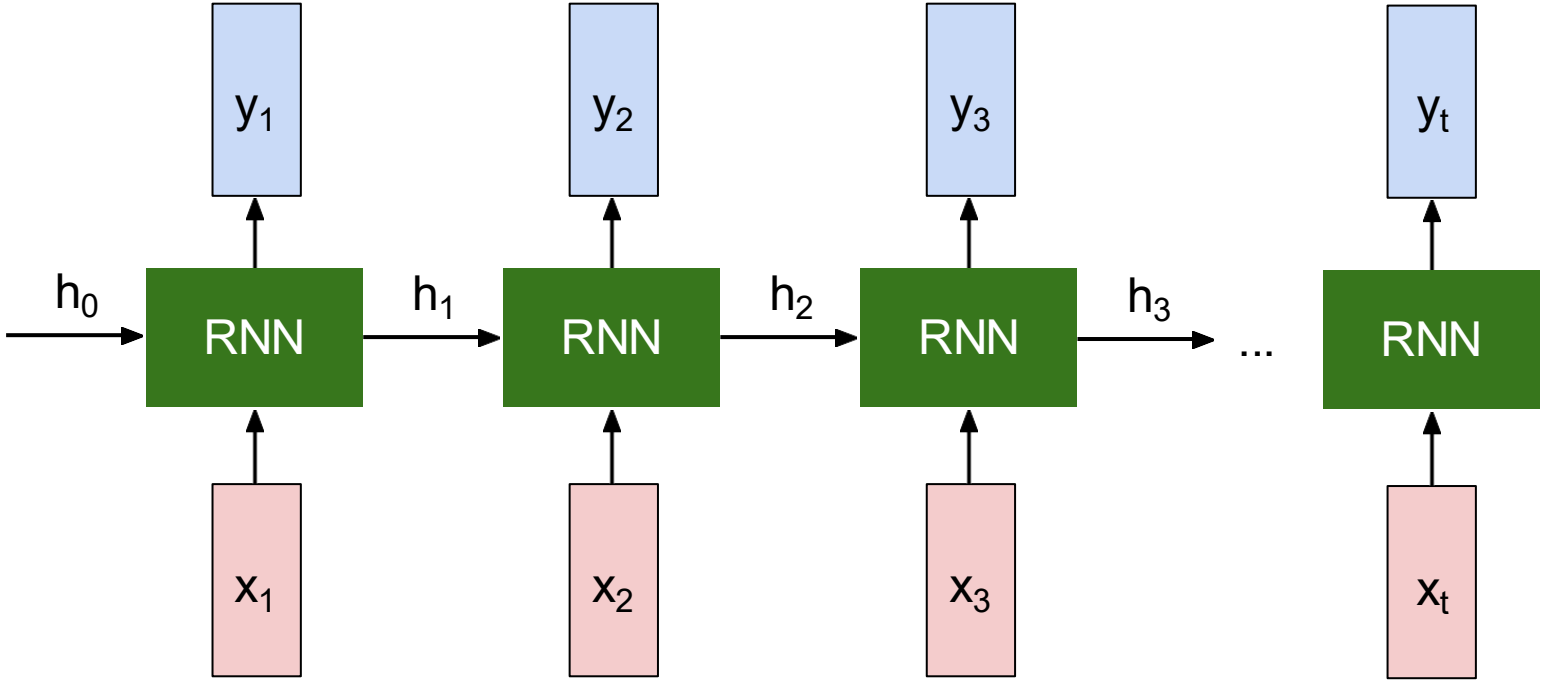

RNN: Computational Graph

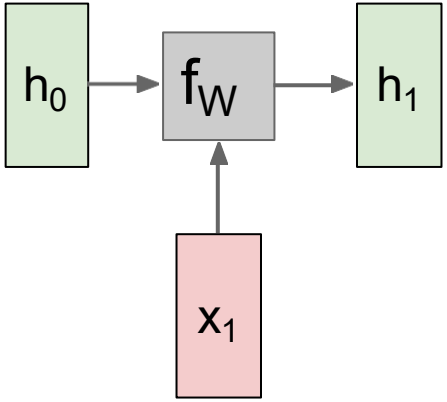

RNN: Computational Graph

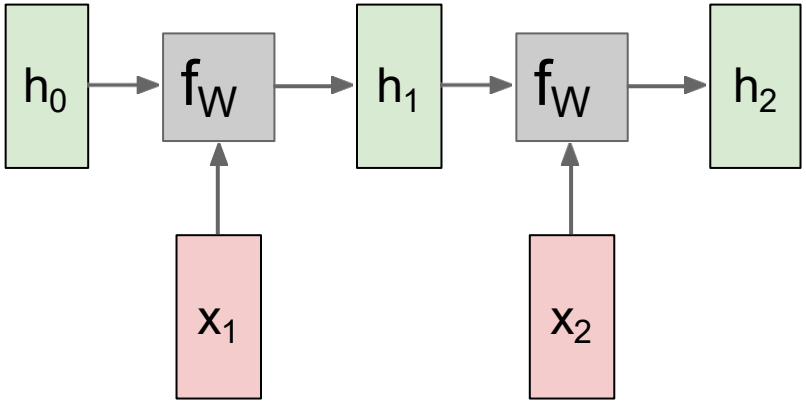

RNN: Computational Graph

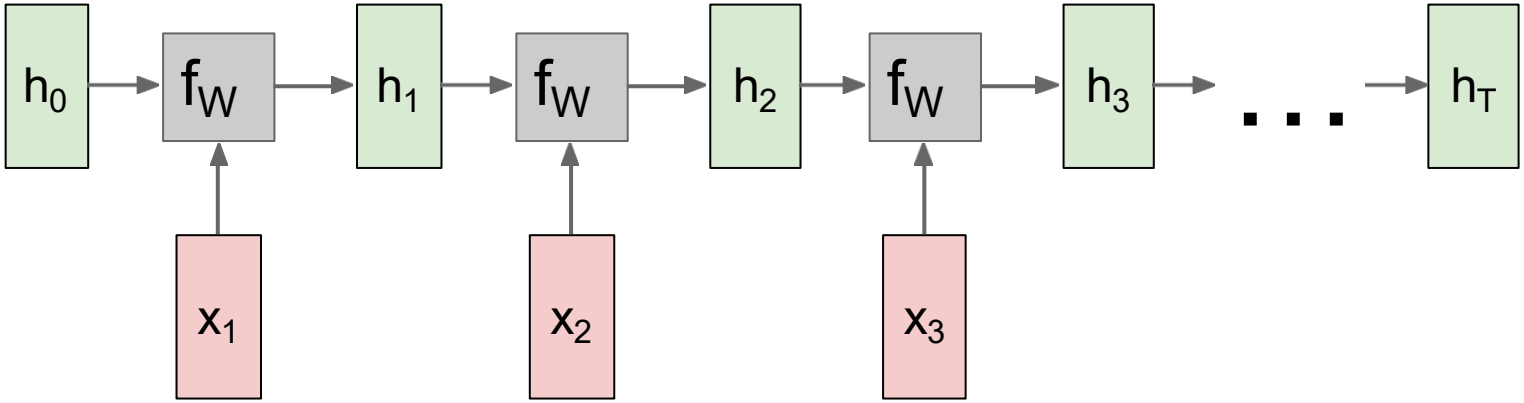

RNN: Computational Graph

Re-use the same weight matrix at every time-step

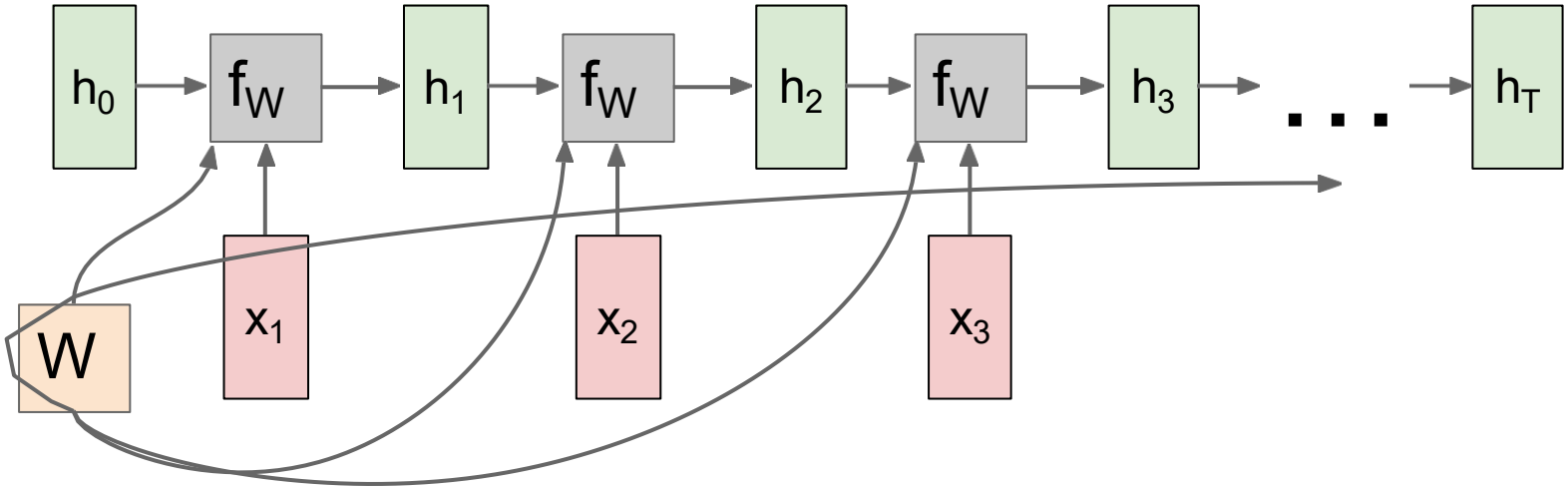

RNN: Computational Graph: Many to Many

(such as Translation, Speech Recognition, etc.)

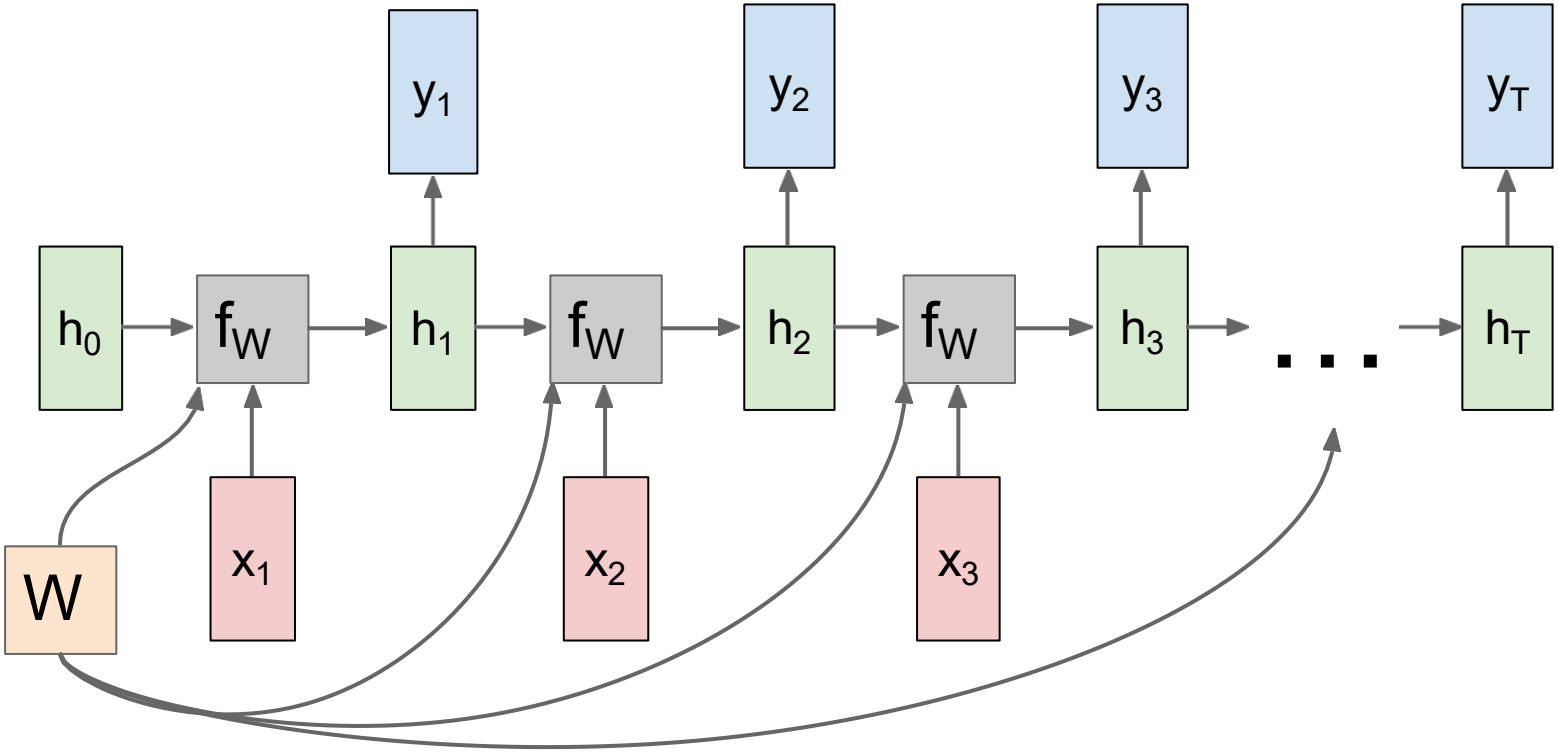

RNN: Computational Graph: Many to One

(such as NER, document classification, sentiment analysis, etc.)

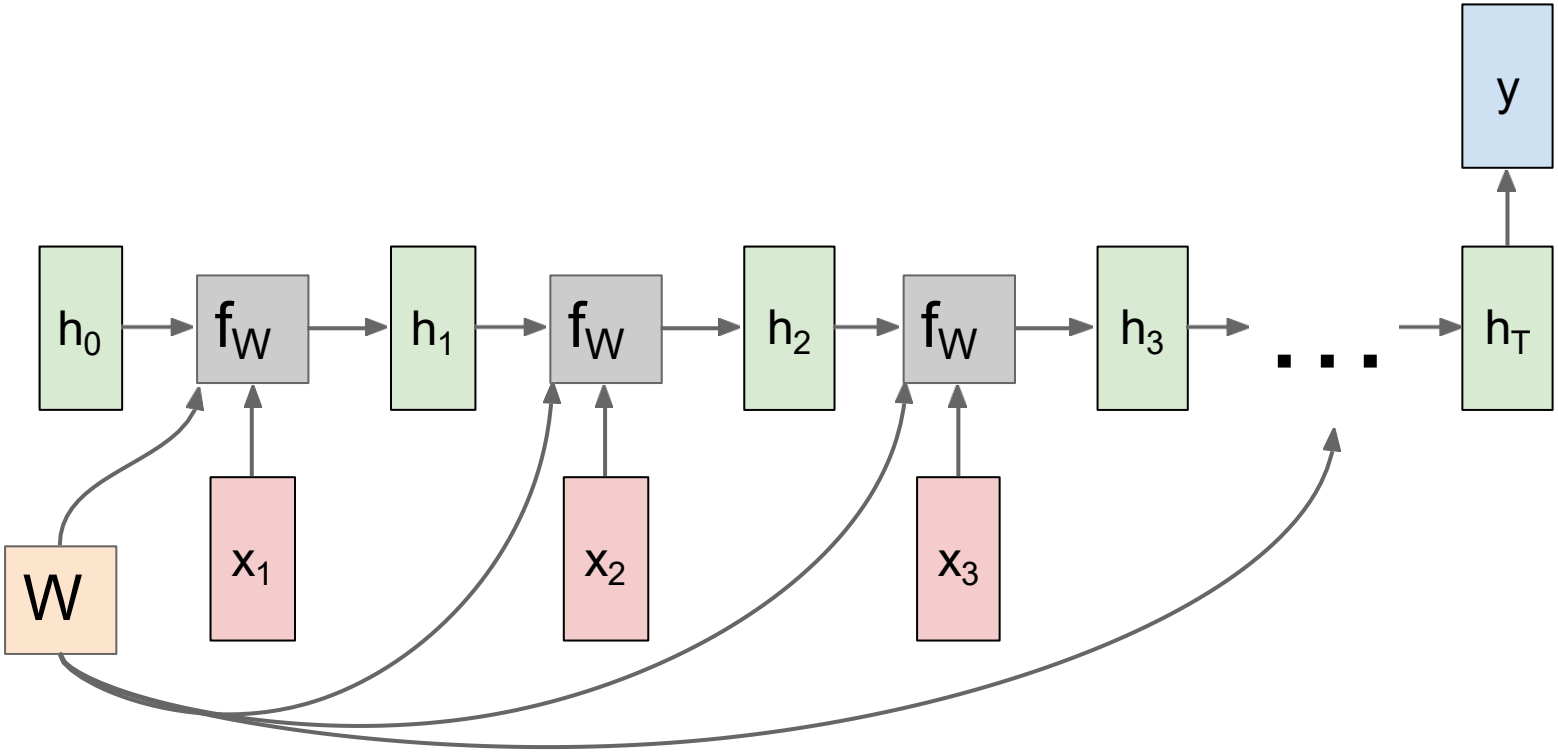

RNN: Computational Graph: Many to One

(such as NER, document classification, sentiment analysis, etc.)

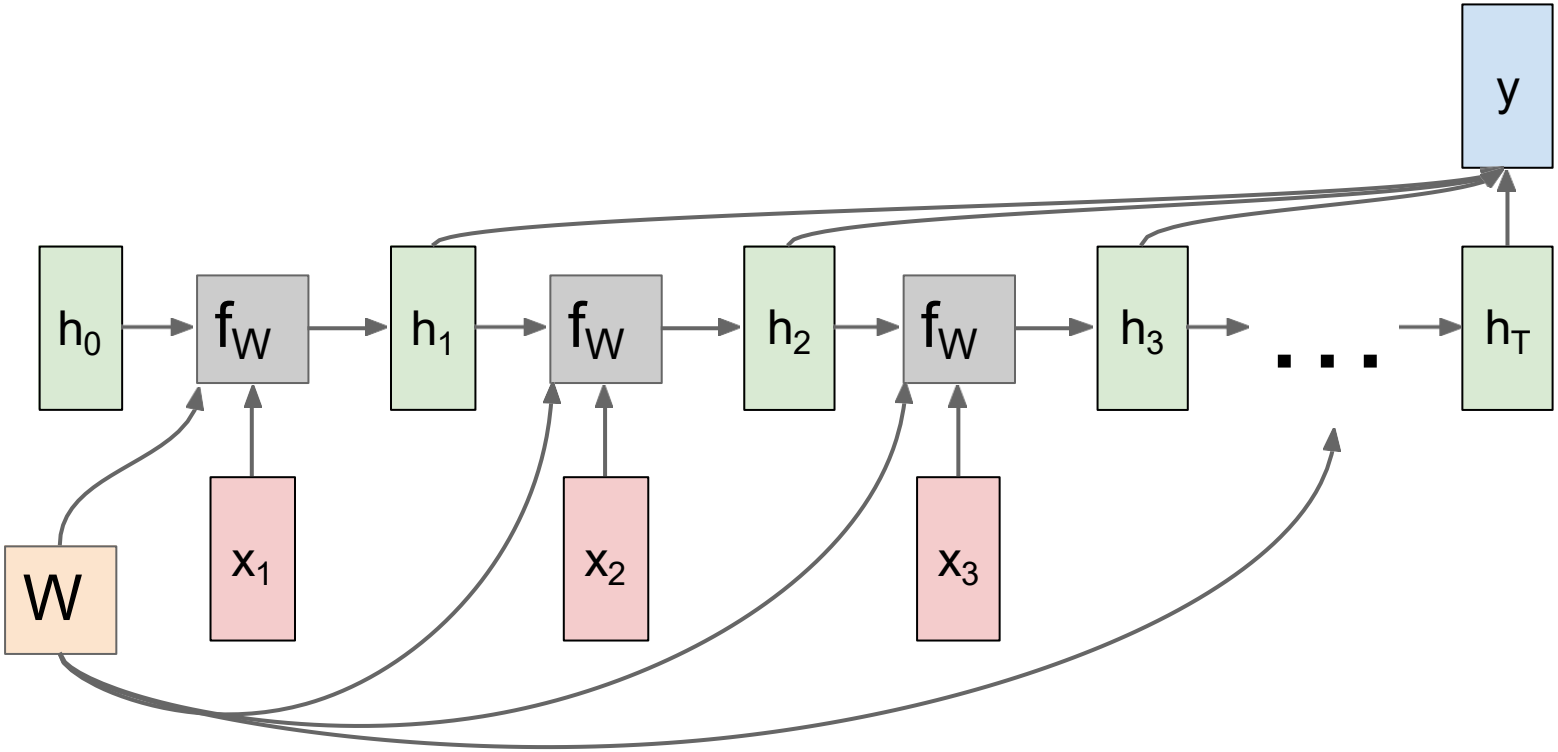

RNN: Computational Graph: One to Many

(such as image captioning, video description, etc.)

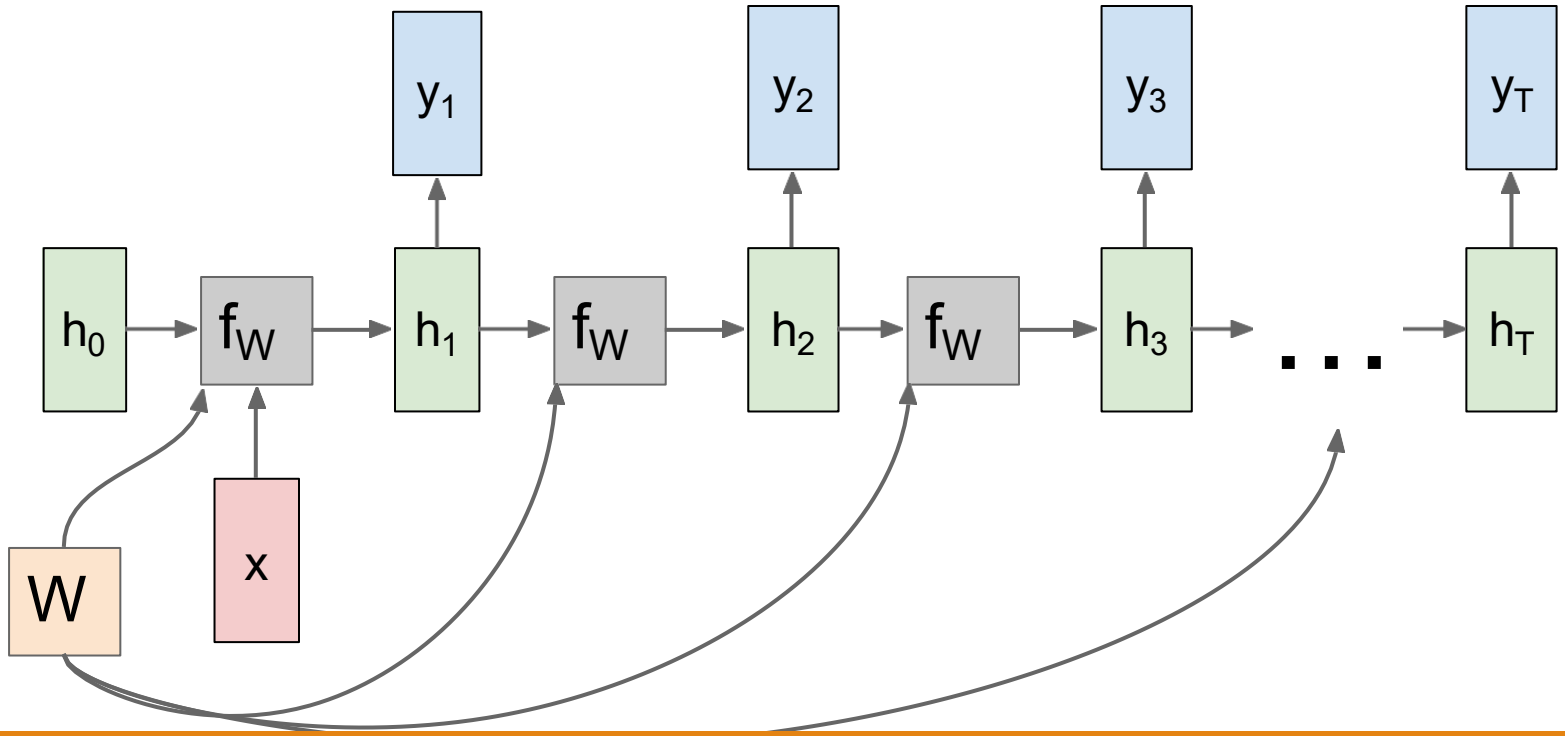

Parameters in RNNs

RNN can be written as:

$$
\begin{aligned}
h_t &= \tanh(W_{hh} h_{t-1} + W_{xh} x_t) \\
&= \tanh\left(\begin{pmatrix} W_{hh} & W_{hx} \end{pmatrix} \begin{pmatrix} h_{t-1} \\ x_t \end{pmatrix} \right) \\
&= \tanh\left(W \begin{pmatrix} h_{t-1} \\ x_t \end{pmatrix} \right)
\end{aligned}
$$

Hochreiter and Schmidhuber, “Long Short Term Memory”, Neural Computation 1997

RNN Gradient Flow

Bengio et al, “Learning long-term dependencies with gradient descent is difficult”, IEEE Transactions on Neural Networks, 1994
Pascanu et al, “On the difficulty of training recurrent neural networks”, ICML 2013

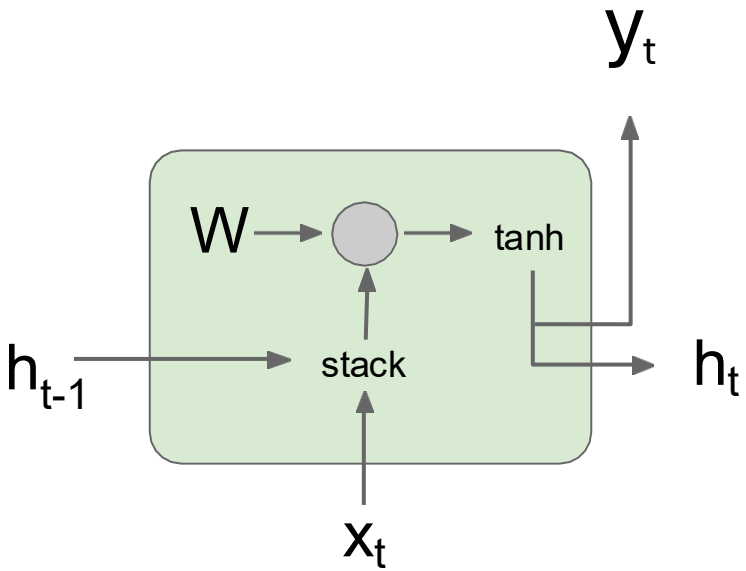

$$
\begin{aligned}
h_t &= \tanh(W_{hh} h_{t-1} + W_{xh} x_t) \\
&= \tanh\left(\begin{pmatrix} W_{hh} & W_{hx} \end{pmatrix} \begin{pmatrix} h_{t-1} \\ x_t \end{pmatrix} \right) \\
&= \tanh\left(W \begin{pmatrix} h_{t-1} \\ x_t \end{pmatrix} \right)
\end{aligned}
$$

RNN Gradient Flow

Bengio et al, "Learning long-term dependencies with gradient descent is difficult", IEEE Transactions on Neural Networks, 1994
Pascanu et al, "On the difficulty of training recurrent neural networks", ICML 2013

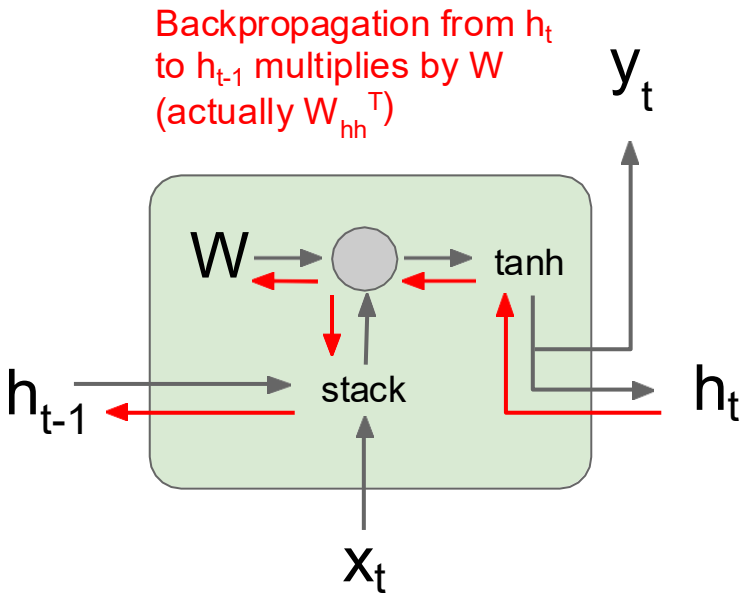

$$
\begin{aligned}
h_t &= \tanh(W_{hh}h_{t-1} + W_{xh}x_t) \\
&= \tanh\left(\begin{pmatrix} W_{hh} & W_{hx} \end{pmatrix}\begin{pmatrix} h_{t-1} \\ x_t \end{pmatrix}\right) \\
&= \tanh\left(W\begin{pmatrix} h_{t-1} \\ x_t \end{pmatrix}\right)
\end{aligned}
$$

RNN Gradient Flow

Bengio et al, “Learning long-term dependencies with gradient descent is difficult”, IEEE Transactions on Neural Networks, 1994
Pascanu et al, “On the difficulty of training recurrent neural networks”, ICML 2013

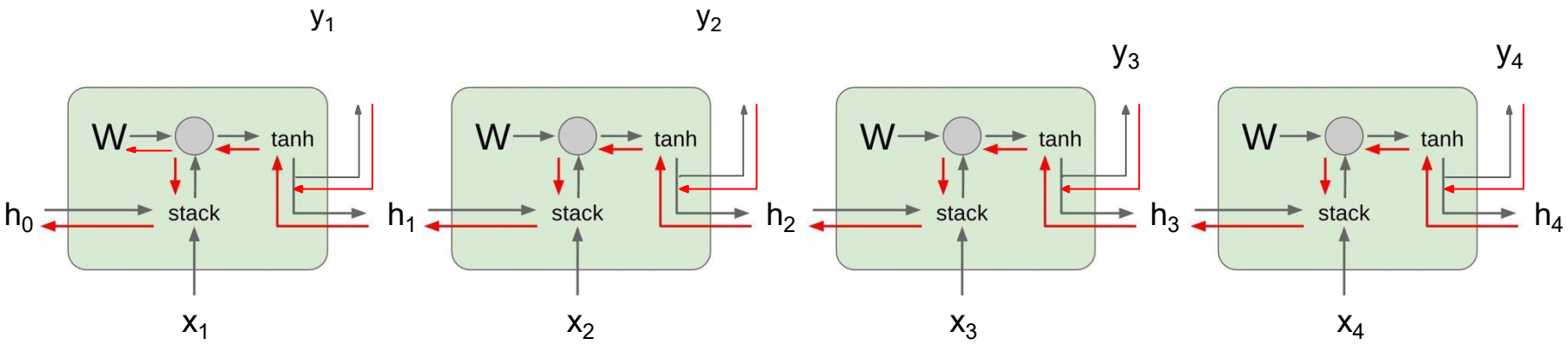

$$\frac{\partial L}{\partial W} = \sum_{t=1}^{T} \frac{\partial L_t}{\partial W}$$

RNN Gradient Flow

Bengio et al, “Learning long-term dependencies with gradient descent is difficult”, IEEE Transactions on Neural Networks, 1994
Pascanu et al, “On the difficulty of training recurrent neural networks”, ICML 2013

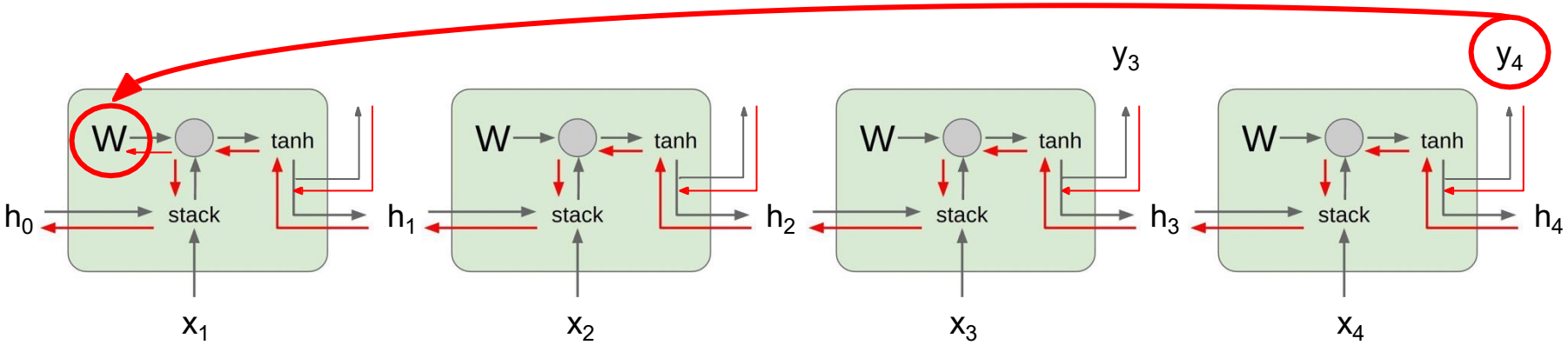

$$\frac{\partial L}{\partial W} = \sum_{t=1}^{T} \frac{\partial L_t}{\partial W}$$

$$\frac{\partial L_T}{\partial W} = \frac{\partial L_T}{\partial h_T} \frac{\partial h_t}{\partial h_{t-1}} \cdots \frac{\partial h_1}{\partial W}$$

RNN Gradient Flow

Bengio et al, “Learning long-term dependencies with gradient descent is difficult”, IEEE Transactions on Neural Networks, 1994
Pascanu et al, “On the difficulty of training recurrent neural networks”, ICML 2013

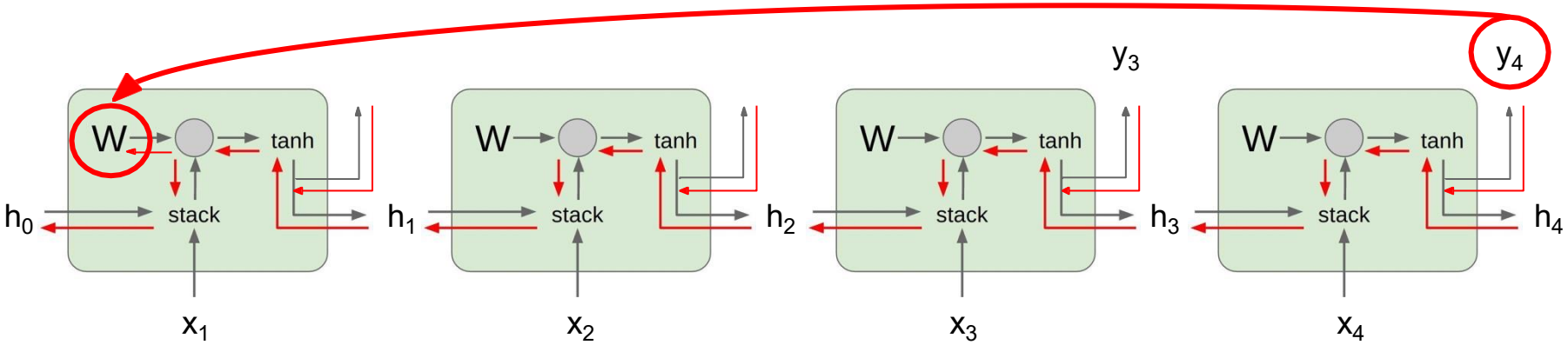

$$\frac{\partial L}{\partial W} = \sum_{t=1}^{T} \frac{\partial L_t}{\partial W}$$

$$\frac{\partial L_T}{\partial W} = \frac{\partial L_T}{\partial h_T} \frac{\partial h_t}{\partial h_{t-1}} \cdots \frac{\partial h_1}{\partial W} = \frac{\partial L_T}{\partial h_T} \left(\prod_{t=2}^{T} \frac{\partial h_t}{\partial h_{t-1}} \right) \frac{\partial h_1}{\partial W}$$

RNN Gradient Flow

Bengio et al, “Learning long-term dependencies with gradient descent is difficult”, IEEE Transactions on Neural Networks, 1994
Pascanu et al, “On the difficulty of training recurrent neural networks”, ICML 2013

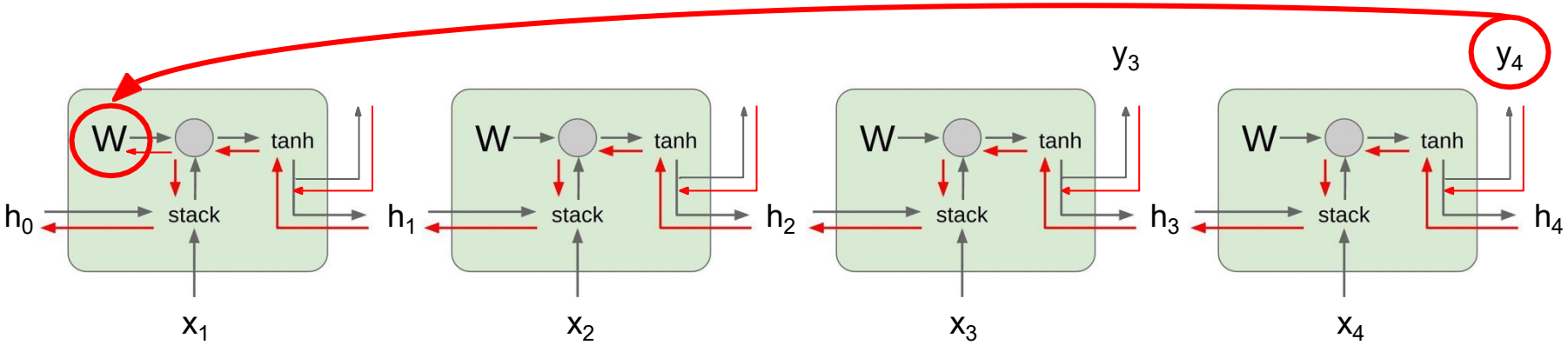

$$\frac{\partial L}{\partial W} = \sum_{t=1}^{T} \frac{\partial L_t}{\partial W}$$

$$\boxed{\frac{\partial h_t}{\partial h_{t-1}} = tanh'(W_{hh} h_{t-1} + W_{xh} x_t) W_{hh}}$$

$$\frac{\partial L_T}{\partial W} = \frac{\partial L_T}{\partial h_T} \frac{\partial h_t}{\partial h_{t-1}} \cdots \frac{\partial h_1}{\partial W} = \frac{\partial L_T}{\partial h_T} \left(\prod_{t=2}^{T} \boxed{\frac{\partial h_t}{\partial h_{t-1}}} \right) \frac{\partial h_1}{\partial W}$$

RNN Gradient Flow

Bengio et al, “Learning long-term dependencies with gradient descent is difficult”, IEEE Transactions on Neural Networks, 1994
Pascanu et al, “On the difficulty of training recurrent neural networks”, ICML 2013

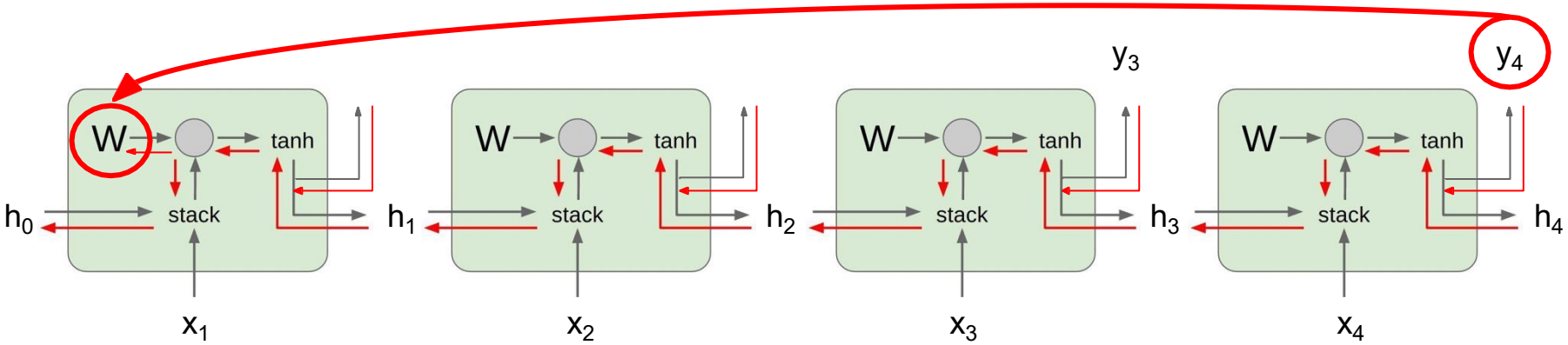

$$\frac{\partial L}{\partial W} = \sum_{t=1}^{T} \frac{\partial L_t}{\partial W}$$

Almost always < 1

Vanishing gradients

$$\frac{\partial L_T}{\partial W} = \frac{\partial L_T}{\partial h_T}\left(\prod_{t=2}^{T} \boxed{tanh'(W_{hh}h_{t-1} + W_{xh}x_t)}\ W_{hh}^{T-1}\right)\frac{\partial h_1}{\partial W}$$

Long Short-Term Memory (LSTM)

RNN

$$h_t = \tanh\left(W\begin{pmatrix} h_{t-1} \\ x_t \end{pmatrix}\right)$$

LSTM

$$\begin{pmatrix} i \\ f \\ o \\ g \end{pmatrix} = \begin{pmatrix} \sigma \\ \sigma \\ \sigma \\ \tanh \end{pmatrix} W \begin{pmatrix} h_{t-1} \\ x_t \end{pmatrix}$$

$$c_t = f \odot c_{t-1} + i \odot g$$

$$h_t = o \odot \tanh(c_t)$$

Hochreiter and Schmidhuber, “Long Short Term Memory”, Neural Computation 1997

Long Short-Term Memory (LSTM)

RNN

$$h_t = \tanh\left(W \begin{pmatrix} h_{t-1} \\ x_t \end{pmatrix}\right)$$

LSTM

$$\begin{pmatrix} i \\ f \\ o \\ g \end{pmatrix} = \begin{pmatrix} \sigma \\ \sigma \\ \sigma \\ \tanh \end{pmatrix} W \begin{pmatrix} h_{t-1} \\ x_t \end{pmatrix}$$

$$c_t = f \odot c_{t-1} + i \odot g$$

Hidden state

$$h_t = o \odot \tanh(c_t)$$

Hochreiter and Schmidhuber, “Long Short Term Memory”, Neural Computation 1997

Long Short-Term Memory (LSTM)

RNN

$$h_t = \tanh\left(W\begin{pmatrix} h_{t-1} \\ x_t \end{pmatrix}\right)$$

LSTM

$$\begin{pmatrix} i \\ f \\ o \\ g \end{pmatrix} = \begin{pmatrix} \sigma \\ \sigma \\ \sigma \\ \tanh \end{pmatrix} W \begin{pmatrix} h_{t-1} \\ x_t \end{pmatrix}$$

Cell state → $c_t = f \odot c_{t-1} + i \odot g$

Hidden state → $h_t = o \odot \tanh(c_t)$

Hochreiter and Schmidhuber, “Long Short Term Memory”, Neural Computation 1997

Long Short-Term Memory (LSTM)

RNN

$$h_t = \tanh\left(W\begin{pmatrix} h_{t-1} \\ x_t \end{pmatrix}\right)$$

LSTM

Four gates

$$\begin{pmatrix} i \\ f \\ o \\ g \end{pmatrix} = \begin{pmatrix} \sigma \\ \sigma \\ \sigma \\ \tanh \end{pmatrix} W \begin{pmatrix} h_{t-1} \\ x_t \end{pmatrix}$$

Cell state

$$c_t = f \odot c_{t-1} + i \odot g$$

Hidden state

$$h_t = o \odot \tanh(c_t)$$

Hochreiter and Schmidhuber, “Long Short Term Memory”, Neural Computation 1997

Long Short Term Memory (LSTM)

[Hochreiter et al.. 1997]

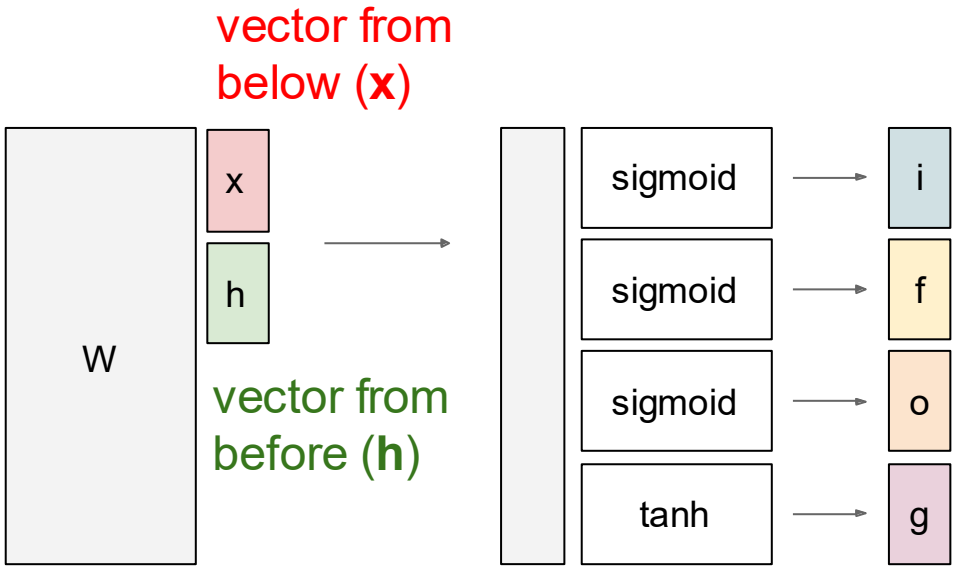

Long Short Term Memory (LSTM)

[Hochreiter et al., 1997]

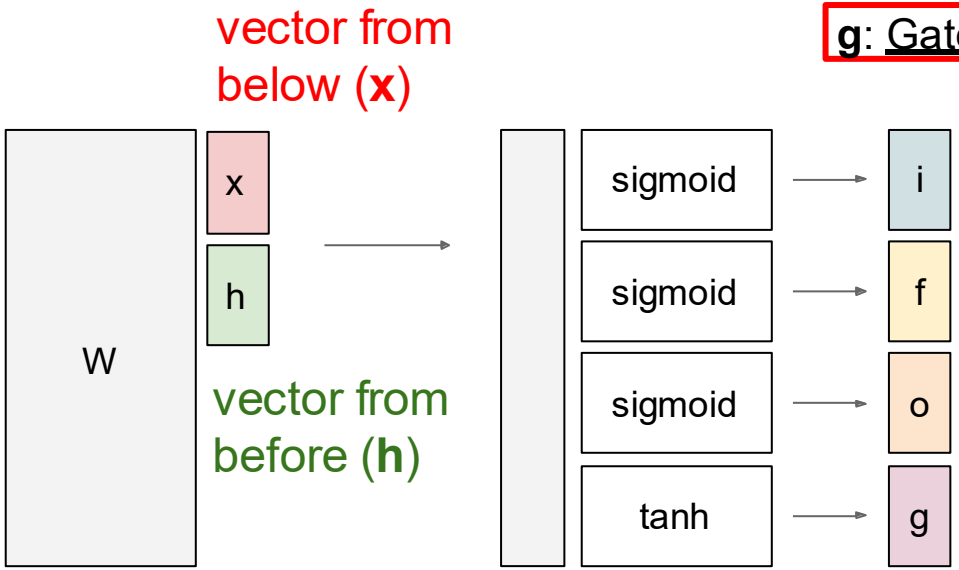

g: Gate gate, How much to write to cell

Gate gate is also known as Candidate cell state

$$\begin{pmatrix} i \\ f \\ o \\ g \end{pmatrix} = \begin{pmatrix} \sigma \\ \sigma \\ \sigma \\ \boxed{\tanh} \end{pmatrix} W \begin{pmatrix} h_{t-1} \\ x_t \end{pmatrix}$$

$$c_t = f \odot c_{t-1} + i \odot \boxed{g}$$

$$h_t = o \odot \tanh(c_t)$$

Long Short Term Memory (LSTM)

[Hochreiter et al., 1997]

i: Input gate, whether to write to cell

g: Gate gate, How much to write to cell

Gate gate is also known as Candidate cell state

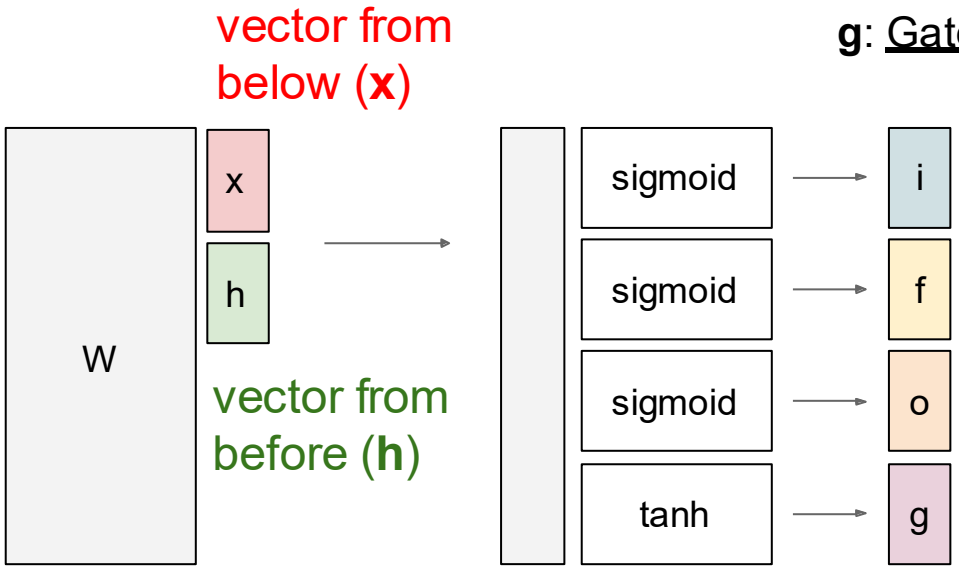

$$\begin{pmatrix} i \\ f \\ o \\ g \end{pmatrix} = \begin{pmatrix} \boxed{\sigma} \\ \sigma \\ \sigma \\ \tanh \end{pmatrix} W \begin{pmatrix} h_{t-1} \\ x_t \end{pmatrix}$$

$$c_t = f \odot c_{t-1} + \boxed{i} \odot g$$

$$h_t = o \odot \tanh(c_t)$$

Long Short Term Memory (LSTM)

[Hochreiter et al., 1997]

i: Input gate, whether to write to cell

f: Forget gate, Whether to erase cell

g: Gate gate, How much to write to cell

Gate gate is also known as Candidate cell state

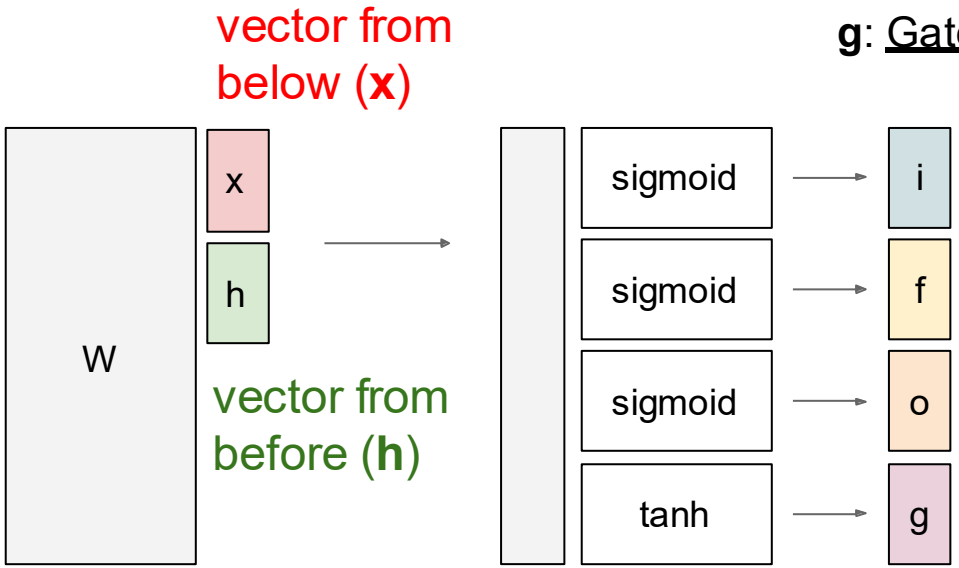

$$\begin{pmatrix} i \\ f \\ o \\ g \end{pmatrix} = \begin{pmatrix} \sigma \\ \boxed{\sigma} \\ \sigma \\ \tanh \end{pmatrix} W \begin{pmatrix} h_{t-1} \\ x_t \end{pmatrix}$$

$$c_t = \boxed{f} \odot c_{t-1} + i \odot g$$

$$h_t = o \odot \tanh(c_t)$$

Long Short Term Memory (LSTM)

[Hochreiter et al., 1997]

i: Input gate, whether to write to cell
f: Forget gate, Whether to erase cell
o: Output gate, How much to reveal cell
g: Gate gate, How much to write to cell

Gate gate is also known as Candidate cell state

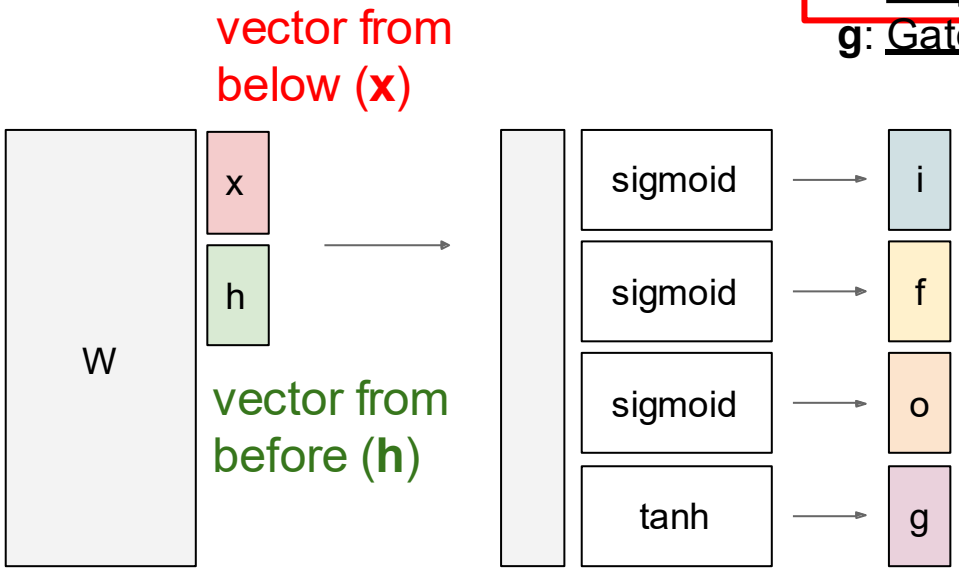

$$\begin{pmatrix} i \\ f \\ o \\ g \end{pmatrix} = \begin{pmatrix} \sigma \\ \sigma \\ \boxed{\sigma} \\ \tanh \end{pmatrix} W \begin{pmatrix} h_{t-1} \\ x_t \end{pmatrix}$$

$$c_t = f \odot c_{t-1} + i \odot g$$

$$h_t = \boxed{o} \odot \tanh(c_t)$$

Long Short Term Memory (LSTM)

[Hochreiter et al., 1997]

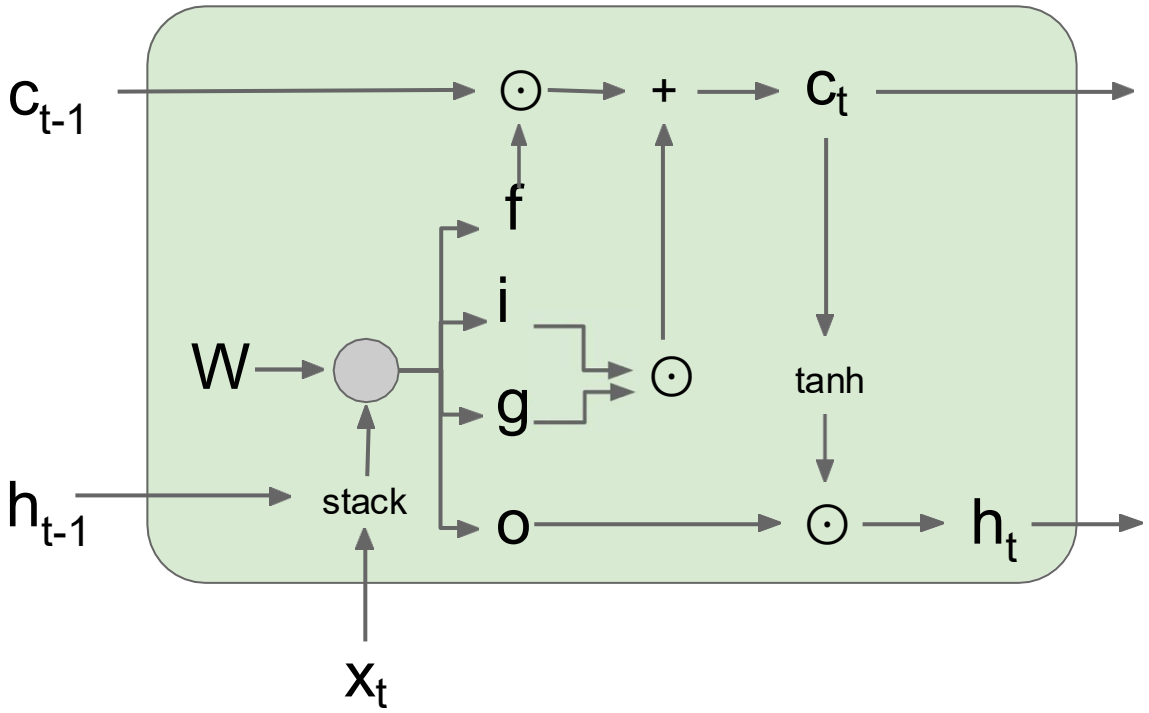

$$\begin{pmatrix} i \\ f \\ o \\ g \end{pmatrix} = \begin{pmatrix} \sigma \\ \sigma \\ \sigma \\ \tanh \end{pmatrix} W \begin{pmatrix} h_{t-1} \\ x_t \end{pmatrix}$$

$$c_t = f \odot c_{t-1} + i \odot g$$

$$h_t = o \odot \tanh(c_t)$$

Long Short Term Memory (LSTM): Gradient Flow

[Hochreiter et al., 1997]

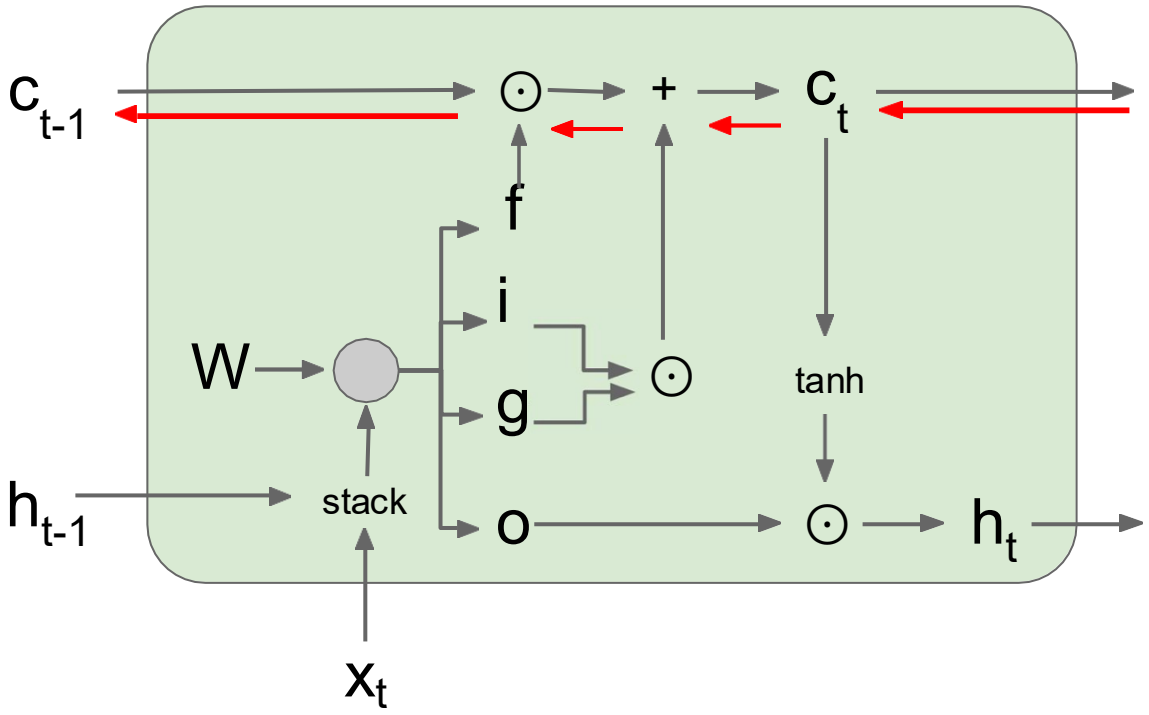

Backpropagation from c_t to c_{t-1} only elementwise multiplication by f, no matrix multiply by W

$$\begin{pmatrix} i \\ f \\ o \\ g \end{pmatrix} = \begin{pmatrix} \sigma \\ \sigma \\ \sigma \\ \tanh \end{pmatrix} W \begin{pmatrix} h_{t-1} \\ x_t \end{pmatrix}$$

$$c_t = f \odot c_{t-1} + i \odot g$$

$$h_t = o \odot \tanh(c_t)$$

Long Short Term Memory (LSTM): Gradient Flow

[Hochreiter et al., 1997]

Uninterrupted gradient flow!

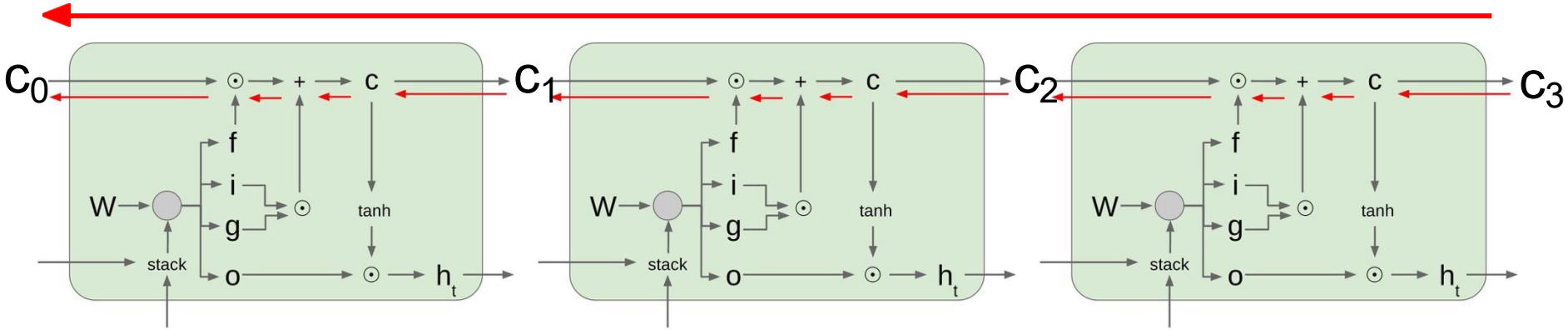

The gradient contains the **f** gate's vector of activations, which allows better control of gradient values, using suitable parameter updates of the forget gate.

To address the vanishing gradient problem

The LSTM architecture makes it easier for the RNN to preserve information over many timesteps

- e.g. **if the f = 1 and the i = 0**, then the information of that cell is preserved indefinitely.
- This is exactly what gives LSTMs their ability **to remember information over long distances.**
- By contrast, it's harder for vanilla RNN to learn a recurrent weight matrix that preserves info in hidden state

Bidirectional LSTM

- **Standard LSTM** processes input only in one direction (i.e., left-to-right).
- **Bidirectional LSTM** runs two LSTMs in parallel:
  - Forward LSTM → Processes the sequence from start to end.
  - Backward LSTM → Processes the sequence from end to start.
  - The outputs of both LSTMs are concatenated or summed at each time step to form a richer representation.
  - **More context-aware** than standard LSTMs.
- We will compare standard vs. bidirectional LSTM in the code exercise.

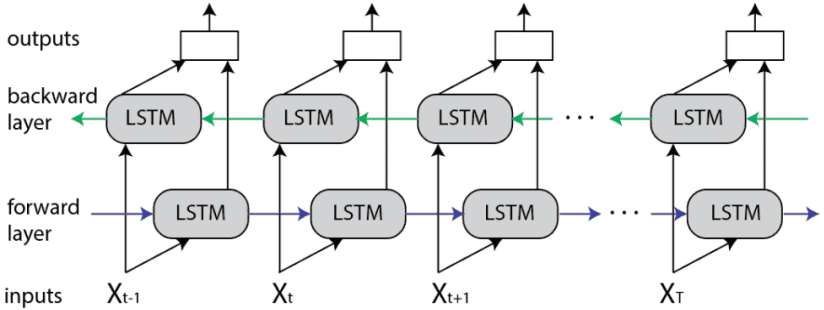

Image: https://shorturl.at/mHnSa

Summary

- RNNs allow a lot of flexibility in architecture design
- Vanilla RNNs are simple but don’t work very well
- Backward flow of gradients in RNN can vanish.
- Vanishing is controlled by LSTM
- Better architectures are a hot topic of research, as well as new paradigms for reasoning over sequences

References

- Hochreiter, S., & Schmidhuber, J. (1997). Long short-term memory. Neural computation, 9(8), 1735-1780.
- Sutskever, I., Vinyals, O., & Le, Q. V. (2014). Sequence to sequence learning with neural networks. Advances in neural information processing systems, 3104-3112.
- Cho, K., van Merrienboer, B., Bahdanau, D., & Bengio, Y. (2014). Gated recurrent units. arXiv preprint arXiv:1406.1078.
- Schuster, M., & Paliwal, K. K. (1997). Bidirectional recurrent neural networks. IEEE Transactions on Signal Processing, 45(11), 2673-2681.
- Chung, J., Gulcehre, C., Cho, K., & Bengio, Y. (2014). Empirical evaluation of gated recurrent neural networks on sequence modeling. arXiv preprint arXiv:1412.3555.
- Collobert, R., Weston, J., Bottou, L., Karlen, M., Kavukcuoglu, K., & Kuksa, P. (2011). Natural language processing (almost) from scratch. Journal of Machine Learning Research, 12(Aug), 2493-2537.
- Le, Q. V., Jaitly, N., & Hinton, G. E. (2015). A simple way to initialize recurrent networks of rectified linear units. arXiv preprint arXiv:1504.00941.
- Zaremba, W., Sutskever, I., & Vinyals, O. (2014). Recurrent neural network regularization. arXiv preprint arXiv:1409.2329.

Questions?